A CASE STUDY AT COMPANY X ON DETERMINING SELLING PRICE BASED ON COST PLUS PRICING

Written by:

Ihsanul Alvin Sofyan

Supervisor:

Dr.Drs.Bambang Hariadi,M.Ec., Ak.

Accounting, Faculty of Economy and Business, Brawijaya University

Jl. MT. Haryono No. 165, Malang

ABSTRACT

In a company that mainly use machinary as labor in processing a product, determining the selling price can be tricky, due to the large number of expenses that will be the determining factor of the selling price, which the expenses cover machine maintenance, repair, depreciation, etc. Company X only apply expenses data that is directly shared evently by all the products they produce, where this action can increase or reduce the selling price in an inaccurate way. Therefore, the writer will calculate the selling price determination using the Cost-Plus Pricing method and determine the cost of goods sold using the Process Costing method which is found by the author to be more suitable for Company X. The emergence of the ASIA free market has also affected mining companies, due to the many products imported to Indonesia market has a selling price that is much lower than the average market price in Indonesia that causing customers loss, therefore in addition to maximizing the accuracy of production calculations and product selling prices, researchers will also try to maintain the selling price in order to remain able to compete and / or give an opportunity to make new customers.

Keyword: Process Costing, Cost-Plus Pricing, Mineral Processing Company.

INTRODUCTION

Marketing approaches and pricing accuracy strategies are crucial to maintaining the existence of the domestic industry, understanding multiple production stages in the industrial mineral processing company, that involving heavy equipment in the production process inspires author to understand further methodology of costing accurately, for the implementation of costing in mineral processing industry. Furthermore, pricing in an industrial company is challenging by the cause of many factors such as the maximum price limit form a rival company and minimum price limit from the cost of goods sold. This context leads the author to conduct a research in one mineral processing company located in Mojokerto.

Company X is a national mineral processing company located Mojekerto that processes minerals non-metallic such as Silica, Feldspar, and Quarts. The company produces a semi-finish product to be supplied to its industrial customer for the application to: Glass, Ceramic, Metal Casting, and Paint and Coating industries. The company was established in 2014 in the industrial

estate area with the land size of 4 hectares and under an estimated investment of IDR 60 billion. The machines are installed with multiple arrangements of a local and imported product. The company went to market stream in 2016 and is now struggling due to competition of ceramic products and its raw material from local and import. The manufacturing production process uses a variety of machinery in several stages of the production process. Each stage production shall bear a different level of cost and its associated expenses.

The fact that assuming full cost and proportionally distributed into each product can be a significant threat and risk for the company in the market environment that having a such though competition. Customers can be disappointed due to the price gap against a competitor for a similar product. The unintended mistake can lead to further disappointment and losing trust, and it will be difficult to recover if there is no action taken to improve the company pricing strategy.

The pricing accuracy shall be reviewed comprehensively, including the overhead cost distribution into its product costing. Ideally, the distribution cost shall reflect the actual cost consumed in each stage production. Production costs calculation is fundamental because it is related to determine the production cost and also in the decision making process of product sale price and can affect the profitability of the company.

Company X operation could be separated into several stages of production, and each stage of production may produce product that can be sold to the market. The company provides several products including:

1. Silica powder 200 mesh for Frits and Glaze application
2. Silica powder 325 mesh for Paint Coating and Ceramic
3. Feldspar 200 mesh for First, metal welding application and Glass application
4. Dry sand for metal casting application and environment water treatment

The company's production process uses a variety of machinery so that it absorbs a specific unit cost for each process. To calculate the production cost, it requires accurate and appropriate data of allocation and its cost distribution. The price shall reflect the amount of energy, raw material, and service cost for each product and its manufacturing activities. Hence, the author's understanding of the above process proposes more straightforward methods while maintaining cost accuracy.

Appropriate costing is crucial to assure customer satisfaction and provide a sustainable company business strategy. Pricing mistakes can lead to losing customers, and finally, the sales will decline and then the company loses the profit opportunity.

It is known that the production process changes along with the development of technology and information, and it allows complicated production stages using various machines to produce efficiently and involve automation processes with minimum labor involvement. With automation, the number of labour is reduced and lowering fixed overhead costs and increasing the investment cost. In this capital intensive industry, the composition of production costs will shift the nature of fixed cost from labour overhead into a factory overhead cost.

According to Daljono (2005: 194), in an advanced industrial environment where production carried out automatically, the portion of labour costs becomes much smaller when

compared to the overall costs. Meanwhile, the factory overhead portion becomes more considerable. A large number of overhead costs will cause problems in allocating/charging costs to the product if several types of goods are produced in one facility. If a facility is used to process various types of products (multiple product settings), overhead costs are shared to certain types of products. A problem arises when identifying the amount of overhead for each product.

According to Garrison et al. (2006), factory overhead costs are costs that difficult to approve and allocate to products because each product or order does not require the same overhead costs. Inaccuracy in calculating the production cost may have a detrimental impact on the company because production cost serves as the basis to determine selling prices and profits, also as a tool to measure the efficiency of the production process and as a basis for decision making for company management.

The process of determining the cost of goods sold and selling price is one of the most crucial thing in order to operate a manufacture company, and so this research will be focused on how to solve the problems as follow:

1. Is separating the operational expenses in accordance with the portion is better than shared the expenses evenly to all the product?
2. Is benchmarking selling price of company with the average selling price in the market necessary in order to determining the selling price?
3. Is lowering the selling price will increase the possible customer for the company?

LITERATURE REVIEW

Cost

A cost is a quantification or measure of the economic sacrifice created to realize a given objective. Therefore, it is a measure of the number of resources sacrificed in achieving a simple goal. For a product, price represents the financial measure of resources used like materials, labour, and overheads. For service, price is the financial sacrifice created to supply the service. Accountants usually use price with alternative descriptive terms, as an example, historical, product, prime, labour, or material. Each of those terms defines some characteristics of the price measure method or a facet of the thing being measured (Strathmore University, 2009).

Process Costing

Process costing system is costs system that suitable for an industrial company such as chemicals, petrol gas, food processing (canned food or flour mills), glass, paints, rubber, steel, and textiles or any type of similar product that are mass-produced (Jr, Dyckman, & Hilton, 1990).

In a manufacturing company, production might take several processes in the departments. Each department performs its specific operation or process to complete the product. For example, the first department mostly performs the starting activity such as drying, cutting, shaping the products or parts. When finished, the unit of products are transferred to the second departments to continue the work, it may include assembling, sanding, packaging, and transfer it to the next department which will be continuous until the units are finally completed and transferred to the finished goods storeroom (Hammer, Carter, & Usry, 2009).

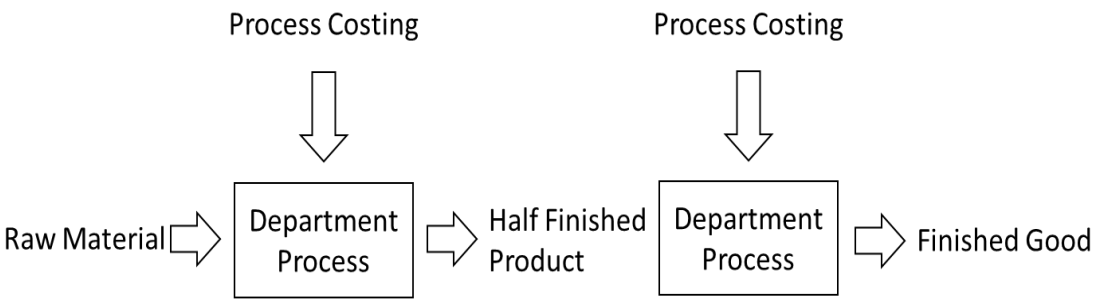

a. Cash Flow in Process Costing

Working in process accounts that is related to reduce the process system costs. Although process system costs can cover many processes, this illustration assumes that there are five departments or operations. In this type of system, direct materials, direct labour, and factory overhead are charged to work in the process in the same way as illustrated in the previous chapter. For this reason, accounts for material, payroll, and factory overhead were removed from the exhibition to simplify illustrations and avoid unnecessary redundancy. However, note that there are more jobs in the process account involved than one account. The general idea is that the cost of units completed in Process # 1 is transferred to Process # 2, together with units that are completed. Each subsequent process carries out additional operations on the product before transferring the units and costs to the next department. Also, it must be noted that the transfer of units and costs from process to process creates a new cost category in the WIP account. This new category is referred to as the transfer-in fee (IT)

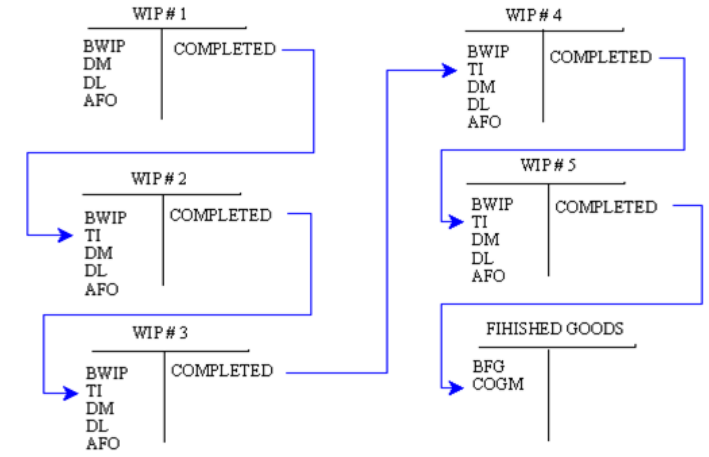

BWIP = Beginning work in process, DM = Direct material costs, DL = Direct labor costs
TI = Transferred in costs, AFO = Applied factory overhead and COGM = Cost of goods manufactured.

There are six categories of work unit in process, the various categories of units applicable in a process cost accumulation system are namely:

1) Units in the beginning inventory: these units start during the previous month and able to finish during the current month. These units are designated as BWIP (Beginning Work in Process).
2) Units start or transferred-in during the month. Summarizing categories one and two and then providing the total numbers of the unit to be counted at the end of the period.
3) Units start during the current month and finished during the current month. Units that begin during the month will be completed at the end of the month, while some of the units consider being half-completed.

4) Units completed. This group includes the units in categories 1 and 3. Units in the beginning work in the process usually finish during the month, as well as some of the units that start during the month. Usually, the completed units and transferred unit are the same, but the difference is that entire unit has a spoiled unit that will be excluded for the next process that has limited space.
5) Units in the ending inventory. Some units that start during the current month but have not finished. This group of units referred to as EWIP (Ending Work in Progress).
Spoiled or lost units. These units do not meet standard, or in some cases, they are simply cannot be found. Lost units are a common thing in an industrial company such as vaporized liquid or spilled materials.

b. Process Costing Calculation

Process costing is a method in which raw materials, labour, and factory overhead are charged to the main cost or department. The costs charged to each unit of product are determined by dividing the total costs charged to the main cost with the number of units produced at the main cost concerned. In the process costing calculation, there are three required data; production data, overhead cost, and raw material cost. Cost of goods sold per unit is calculated as:

Cost of goods sold per unit = Total Cost / Equivalent Unit

The equivalent unit is the total units of finished goods.

Equivalent Unit: Finished Goods + EWIP (ending work in progress) x Completion Rate

Pricing

Price is one element of the marketing mix. Price is one of the most critical elements of a company's marketing strategy. Price is important for marketers because it is from the price of the company's revenue and profits that the company's survival can be maintained. Price is the only element of the marketing mix that generates revenue because the other elements only generate costs. Price is also the most flexible marketing mix element that can be quickly changed.

Cost-Plus Pricing

Market selling price decision is determined with full pricing method strategy (In another term mentioned as ***Cost Plus Pricing Method***) to guarantee the achievement of the selling price feasibility in addition to take into account the market price competition. As explained above of the pricing structure factors, the selling price can be understood as follows:

Selling price = Non Costing Factor + Costing factor.

In the world of industry, the explanation can be presented as follows:

Selling Price = COGP + SGA + Transport + Profit Margin

COGP (Cost of Goods Sold) including = Variable Cost (Material + Energy + Consumable Production + Variable Maintenance) + Fixed Cost (Depreciation + Labour + Other fixed cost)

COGS = COGP + Overhead (Sales cost and General Admin / SG&A) at ex-works

Selling Price = COGS + Transport + Margin

Determination of margins based on a minimum standard of expectation of a return to pay back investment within ten years. However, the determination of profit margins can be flexibly changing the following marketing strategies and market dynamics competition. The standard norms used to maintain competition in the market refers to the interest rate plus + 10% margin with the assumption that 50% of factory capacity must be sold to the market

RESEARCH METHOD

Based on the background, this is a descriptive research with case study method in Company X. Descriptive research is a type of research which describes the whole situation. Usually, it neither make an accurate prediction nor determine cause and effect. The research focused on collecting information about the cost of data being expended by the company in production activities in Company X, where the data are used as references for calculating the Cost of goods sold.

The object investigated in this research is a manufacturing company that focuses on processing minerals non-metal. The object of the research is Company X which is located in Mojokerto. Company X activity is producing and selling the finished goods of mineral non-metal such as silica; its grade will differentiate the product.

Type of data being used in this research is combining or associating the quantitative and qualitative data.

1. Qualitative Data

According to Muhammad Idrus (2009:25), qualitative data is in the type of narrative, a private document, discussion, and many more that cannot be dominated by numbers. Therefore, qualitative data generally in the form of description, narrative, or statement obtained from interviewees. Qualitative data used in this research are organization structure, marketing flow, production process, industrial location, and more information which help the research.

2. Quantitative Data

Quantitative data is research data that mostly dominated by numbers as a result of a measurement of the variable being studied (Muhammad Idrus, 2009:30) so that quantitative data can be measured with instruments or measurements that have been stated as a form of standard. Quantitative data used in this research in the form of reports on product sales data, production costs including raw material costs, labour costs, and information forming factory overhead costs used to determine the cost of goods sold.

RESULTS AND DISCUSSION

Determining The Cost of Goods Sold in Company X by Using Process Costing Method

a. Silica Process

i. Drying

The first step in the process is drying the material; the dried material is considered as a product for the company. The primary material in drying is the silica sand; this process is considered as a crucial step; it is considered crucial because it will produce a wrong quality product in milling process if it is not dried correctly. After all, the water content will be reduced in the

process the mass of product will be reduced roughly around 5% per process. The heat energy obtained from natural gas and the raw material will be transferred through the drying machine with wheel louder that needed fuel to operate. Besides fuel and gas, electricity is needed to operate the machine and control its system. From author's calculation, the cost for the drying process is Rp410.313 per ton which averagely will be processed for 1000 ton. The drying process is the first step for completing the final product. However, it can be packed for finished goods, for the next step of processing the dried material is milling, the final calculation in the drying process will be considered as ending work in progress by drying department.

Drying Silica		
Materials	**Ton**	**Rp/Ton**
		Drying
Raw Material	1000	Rp 335.541
General Maintenance		Rp 7.155
Labour		Rp 2.154
Electricity		Rp 1.024
Fuel		Rp 2.039
Gas		Rp 39.846
Repair & Maintenance		Rp 5.777
Sub Total		Rp 393.536
Loss Factor	5%	Rp 16.777
Ending Work in Progress		**Rp 410.313**

ii. Milling 200 Mesh and 325 Mesh

Milling is the second step in producing the goods; there are two types of milled process in milling which are 200 mesh and 325 mesh. The word mesh shows the fineness of a product. The beginning work in progress in the milling department is continued from the ending work in progress from the drying department, which could be said as dried sand. The dried sand will be milled with an alumina ball that is a consumable item that is used for refining the dried sand into smaller form. The electricity and fuel are used to the rotating machine. Then, it will be transferred to the classifier to determine whether the goods are under the desired level of refinement. The difference between 325 and 200 mesh in the process is how much time does it takes in the process. According to the system, it takes around two times longer than the 200 mesh. The final cost for 200 mesh is Rp567.868 and for the 325 mesh is Rp725.423; this item is considered as the ending work in progress, and it will be transferred to the packaging department.

Milling Silica		
Materials	**Ton**	**Rp/Ton**
		Milling 200 M
Beginning Work in Progress	1000	Rp 410.313
General Maintenance		Rp 14.311
Alumina Ball		Rp 44.574
Labour		Rp 9.693
Electricity		Rp 75.892
Fuel		Rp 2.039
Repair & Maintenance		Rp 11.046
Ending Work in Progress		**Rp 567.868**

Milling Silica		
Materials	**Ton**	**Rp/Ton**
		Milling 325 M
Beginning Work in Progress	1000	Rp 410.313
General Maintenance		Rp 28.622
Alumina Ball		Rp 89.148
Labour		Rp 19.386
Electricity		Rp 151.784
Fuel		Rp 4.078
Repair & Maintenance		Rp 22.092
Ending Work in Progress		**Rp 725.423**

iii. Packing

There are three types of package, namely: Bulk Truck, 50 kg paper bag, and 1-ton bag. Each type of package has its own cost; it is because each bag or truck has its prices. However, there is no cost for the bulk truck in the packaging process, but it will be issued in pricing. Particularly for 50 kg, there is a cage of woods called pallet to protect the paper bag from tearing apart and allow it to be more comfortable to be carried by a forklift. The beginning work in progress in table bulk truck is obtained from the ending work in progress in table drying it is because the product for table bulk truck does not need to be milled, so the process are only drying and packing. Meanwhile, the beginning work in progress of table 50 kg 200 mesh and 325 mesh, 1 ton 200 mesh 325 mesh are obtained from ending work in progress of table milling 200 mesh or 325 mesh.

Silica Dry Sand Packing Bulk Truck			
Materials	**Ton**	**Rp/Ton**	
		Packing Bulk Truck	
Beginning Work in Progress	1000	Rp	410.313
Cost of Goods Sold		**Rp**	**410.313**

Silica 200 Mesh Packing Bulk Truck			
Materials	**Ton**	**Rp/Ton**	
		Packing Bulk Truck	
Beginning Work in Progress	1000	Rp	567.868
Cost of Goods Sold		**Rp**	**567.868**

Silica 200 Mesh Packing 50 KG Paper Bag			
Materials	**Ton**	**Rp/Ton**	
		Packing 50 kg Paper Bag	
Beginning Work in Progress	1000	Rp	567.868
General Maintenance		Rp	2.385
Paper Bag		Rp	120.000
Pallet		Rp	25.000
Labour		Rp	2.154
Electricity		Rp	1.711
Repair & Maintenance		Rp	5.777
Rental		Rp	9.000
Cost of Goods Sold		**Rp**	**733.895**

Silica 325 Mesh Packing 50 KG Paper Bag			
Materials	**Ton**	**Rp/Ton**	
		Packing 50 kg Paper Bag	
Beginning Work in Progress	1000	Rp	725.423
General Maintenance		Rp	2.385
Paper Bag		Rp	120.000
Pallet		Rp	25.000
Labour		Rp	2.154
Electricity		Rp	1.711
Repair & Maintenance		Rp	5.777
Rental		Rp	9.000
Cost of Goods Sold		**Rp**	**891.450**

Silica 200 Mesh Packing 1 Ton Bag			
Materials	**Ton**	**Rp/Ton**	
		Packing 1 Ton Bag	
Beginning Work in Progress	1000	Rp	567.868
General Maintenance		Rp	2.385
1 Ton Bag		Rp	124.000
Labour		Rp	2.154
Electricity		Rp	1.711
Repair & Maintenance		Rp	5.777
Rental		Rp	9.000
Cost of Goods Sold		**Rp**	**712.895**

Silica 325 Mesh Packing 1 Ton Bag			
Materials	**Ton**	**Rp/Ton**	
		Packing 1 Ton Bag	
Beginning Work in Progress	1000	Rp	725.423
General Maintenance		Rp	2.385
1 Ton Bag		Rp	124.000
Labour		Rp	2.154
Electricity		Rp	1.711
Repair & Maintenance		Rp	5.777
Rental		Rp	9.000
Cost of Goods Sold		**Rp**	**870.450**

b. Feldspar

i. Drying

The first step in the process is drying the material; the primary material in drying is the feldspar chip; this process is considered as a crucial step. Drying is considered crucial because it will produce a bad quality product in milling process if it is not dried correctly. After all, the water content will be reduced in the process and the mass of product will be reduced roughly around 5% per process. The heat energy obtained from natural gas and the raw material will be transferred through the drying machine with wheel louder that needs fuel to operate. Besides fuel and gas, electricity is also needed to operate the machine and control its system. Author's calculated cost for the drying process is Rp1.455.638 per ton which averagely will be processed for 50 ton. This drying process is the first step for completing the final product. The next step of processing the dried material is milling, the final calculation in the drying process will be considered as ending work in progress by drying department.

Drying Feldspar		
Materials	**Ton**	**Rp/Ton**
		Drying
Raw Material	50	Rp 1.331.089
General Maintenance		Rp 7.155
Labour		Rp 2.154
Electricity		Rp 1.024
Fuel		Rp 2.039
Gas		Rp 39.846
Repair & Maintenance		Rp 5.777
Sub Total		Rp 1.389.084
Loss Factor	5%	Rp 66.554
Ending Work in Progress		**Rp 1.455.638**

ii. Milling 200 Mesh

Milling is the second step in producing the goods; there is only one type of product of 200 mesh. The word mesh is to show the fineness of a product, the higher the number, the finer it gets. Beginning work in progress in the milling department is from the ending work in progress from the drying department, which can be said as a dried chip. The dried chip will be milled with an alumina ball that is a consumable item used for refining the dried chip into smaller form. The electricity and fuel are used to the rotating machine. Then, it will be transferred to the classifier to determine whether the goods fulfil the desired level of refinement or not. Feldspar chips are harder to be refined than the silica because they take more time and energy to be processed. The final cost for feldspar 200 mesh is Rp1,770,748 this item considered as ending work in progress, and it will be transferred to the packaging department.

Milling Feldspar		
Materials	**Ton**	**Rp/Ton**
		Milling 200 M
Beginning Work in Progress	50	Rp 1.455.638
General Maintenance		Rp 28.622
Alumina Ball		Rp 89.148
Labour		Rp 19.386
Electricity		Rp 151.784
Fuel		Rp 4.078
Repair & Maintenance		Rp 22.092
Ending Work in Progress		Rp 1.770.748

iii. Packing

For the feldspar, packaging are available for two types, namely 50 kg and 1-ton bag. The materials used in packing feldspar are same with the one used in silica.

Feldspar 200 Mesh Packing 50 KG Paper Bag			
Materials	**Ton**	**Rp/Ton**	
		Packing 50 kg Paper Bag	
Beginning Work in Progress	50	Rp	1.770.748
General Maintenance		Rp	2.385
Paper Bag		Rp	120.000
Pallet		Rp	25.000
Labour		Rp	2.154
Electricity		Rp	1.711
Repair & Maintenance		Rp	5.777
Rental		Rp	9.000
Cost of Goods Sold		**Rp**	**1.936.775**

Feldspar 200 Mesh Packing 1 Ton Bag			
Materials	**Ton**	**Rp/Ton**	
		Packing 1 Ton Bag	
Beginning Work in Progress	50	Rp	1.770.748
General Maintenance		Rp	2.385
1 Ton Bag		Rp	124.000
Labour		Rp	2.154
Electricity		Rp	1.711
Repair & Maintenance		Rp	5.777
Rental		Rp	9.000
Cost of Goods Sold		**Rp**	**1.915.775**

b. Pricing

According to Gilbert (2003, p.157), price is the monetary value assigned by the seller to some purchased, sold or offered for sale, or transactions by a buyer, as their willingness to pay for the benefits the product and channel service delivers. This quote means that the price is the selling value set by the seller for something bought, sold, offered, or transaction by the buyer, based on the desire to pay for the product's profits. In general, consumers like to buy at stores that offer a variety of products at competitive or low prices, at least according to the product to be consumed. Therefore, the author tried to set the selling price of goods so as not to exceed far from the market price.

Determination of goods price is shown in the table below, including the cost factor and non-cost factor. The cost factor in table 4.14 is in the column named cost/ton presents Cost of Goods Sold in units of tons. This data is obtained from the previous calculation in table packaging silica and feldspar. The next column called Cost/Package presents the Cost of Goods Sold in the form of a package unit, the figure is obtained by dividing the units of tons by kilograms then multiplied by the number of kilograms needed to make one package.

In the next column, there is a depreciation which the figure is obtained from calculating the depreciation of the engine, equipment depreciation, and vehicle depreciation, followed by dividing the amount of depreciation per month by the total number of tons produced and allocated to 8 types of products. In the next column, there is a tax column where the percentages are obtained from tax regulations which have been set by the government. The margin column presents the percentage of profit the company takes from each unit which is 20%, at that value, the company can make a maximum profit without exceeding the market price excessively. In the price column, the figure is obtained from **Cost/Package + Depreciation + Tax + Rate Margin**. On the results of these calculations, it can be seen that there are several products which able to compete with market prices with significant differences.

In setting competitive prices, companies should provide prices that are comparable to or close to those of their competitors. However, if the quality offered is lower than competitors, the company should set the prices lower than competitors (M.Suanto, 2007). According to Sudhir K & Debabrata, Talukdar., 2004, consumers tend to be reluctant to buy low-priced products because consumers doubt the quality of these products. So, it can be concluded that prices can indicate the quality of a product, where consumers have the perception that high prices usually have the good quality.

In the case of prices, there are products of Company X that have more expensive prices compared to the market prices such as silica products 200 mesh with the packaging of 50 kg, silica 325 mesh with the packaging of 50 kg, feldspar 200 mesh with the packaging of 50 kg, and feldspar 200 mesh with the packaging of 1 ton. The company provides proper packaging and maintains quality; therefore, products that exceed market prices could compete well with the products in the market. For the sales process, Company X supplies the collaborating companies, so there is no big problem in competition, even though Company X offers higher price.

		Cost Factor		Non Cost Factor					
No	Product	Cost/ton	Cost/package	Depreciation	Tax	Margin	Cost-Plus Pricing	Company X	Market Price
1	Silica Dry Sand (Bulk Truck)	Rp 410.313	Rp 410.313	Rp 40.298	5 %	20 %	Rp 553.189	Rp 633.173	Rp 650.000
2	Silica 200 mesh(Bulk Truck)	Rp 567.868	Rp 567.868	Rp 40.298	5 %	20 %	Rp 750.133	Rp 816.191	Rp 1.000.000
3	Silica 200 mesh (paper bag 50kg)	Rp 733.895	Rp 36.695	Rp 40.298	5 %	20 %	Rp 86.166	Rp 92.749	Rp 64.618
4	Silica 325 mesh (paper bag 50kg)	Rp 891.450	Rp 44.573	Rp 40.298	5 %	20 %	Rp 96.013	Rp 93.379	Rp 92.165
5	Silica 200 mesh (paper bag 1 ton)	Rp 712.895	Rp 712.895	Rp 40.298	5 %	20 %	Rp 931.416	Rp 1.062.020	Rp 1.255.389

6	Silica 325 mesh (paper bag 1 ton)	Rp 870.450	Rp 870.450	Rp 40.298	5 %	20 %	Rp 1.128.360	Rp 1.074.621	Rp 1.799.881
7	Feldspar 200 mesh (paper bag 50kg)	Rp 1.936.775	Rp 96.839	Rp 40.298	5 %	20 %	Rp 161.346	Rp 161.325	Rp 123.048
8	Feldspar 200 mesh (paper bag 1 ton)	Rp 1.915.775	Rp 1.915.775	Rp 40.298	5 %	20 %	Rp 2.435.017	Rp 2.433.544	Rp 2.434.278

Based on Table above shows the results of the calculation of selling prices, which consist of the calculation Cost-Plus Pricing method, Company X, and the average market price. from the table it can be concluded that there are 3 products calculated by the author exceeding the selling price issued by Company X, the weakness of these results is the difficulty of competing with the product in the market, and there is less chance to increasing the new possible customer, but the advantages of using this method is the accuracy in determining the cost of product.

The advantage of having an accurate calculation in determining the selling price and the cost of goods sold is, the income earned from selling the product could cover all the cost and expenses the company spend in order to obtain the products and maintain the sustainability of the company

CONCLUSION AND SUGGESTION

The following conclusions for cost of goods sold have been made by analysing the data using process costing method and traditional costing method the company use, for the analysing of pricing have been made by analysing the data by using cost-plus pricing method and mark-up pricing the company x use:

- In the case of overhead cost in producing the product, company x did not put consideration of working load in processing the product, while the process costing method put considerate amount to separating working load in processing the product. The percentage for drying is 30%, milling is 60%, and packing is 10% of the total workload. This percentage is obtained through calculating the amount of time used and energy used for each process.
- In case of pricing the determination of margin obtained in cost-plus pricing method is put some consideration in non-cost factor such as taxation, while the company x does not provide taxation as non-cost factor and the company x marking-up the price did not put a limitation based on market price.

Limitation

1. In this study the authors do not take into account the non-cost factor of the consumer price index, due to the lack of information that the author could find at the sources.

2. Incomplete data of the percentage product distribution from raw material to finished goods, so the author is not able to find more accurate prices on the factory overhead, fixed cost, and raw material usage.
3. Incomplete data of the percentage from the most purchased products by the previous period, so that the author is not able to find the appropriate margins for each product and equalize the margins for each product.

Suggestion

Suggestion that can be given in this research include:

1. Company X should divide factory overhead according to the workload needed to produce each of its products, so the company x will discovering more accurate cost of goods sold their products.
2. Company x should limiting the margin based on market prices, to make companies become more capable in competing with market and have the opportunity to get new possible customers

REFERENCES

Aminah, A. N. (2018). *Perusahaan Tambang Kehilangan Laba.* Retrieved from https://www.republika.co.id/berita/ekonomi/migas/18/04/03/p6lr1n384-perusahaan-tambang-kehilangan-laba

Anthony, R. &. (2002). Management control systems 10th Edition. New York: Mcgraw-Hill.

Badan Pusat Statistik. (2019). Direktori Perusahaan Pertambangan Besar. *Direktori Perusahaan Pertambangan Besar 2019*, pp. ix-x.

Basu, S. (1998). Manajemen Pemasaran Modern. Yogyakarta: Liberti.

Carter, W. K. (2009). *Akuntansi Biaya. Edisi 14.* Jakarta: Salemba Empat.

Daljono. (2005). *Akuntansi Biaya Edisi 2.* Semarang: Badan penerbit Universitas Diponegoro.

Deakin, E. B. (1996.). *Akuntansi Biaya Edisi 4, Jilid 1.* . Jakarta: Erlangga.

Garison, e. a. (2013). *Akuntansi Manajerial.* Jakarta: Salemba Empat.

Hammer, L. H., Carter, W. K., & Usry, M. F. (2009). *Cost Accounting.* Jakarta: Salemba Empat.

Hansen, D. R., & Mowen, M. M. (2006). *Cost Management Accounting And Control.* Mason: Thomson South Western.

Haryadi, H. (2010). Perkembangan dan Prospek Bahan Galian Non-Logam Indonesia. *Jurnal Teknologi Mineral dan Batubara*, *06*, 45-63.

Horngren, C. T., Datar, S. M., & Foster, G. (2009). *Cost Accounting.* Jakarta: Salemba Empat.

Horngren, C. T., Foster, G., & and Datar, S. M. (2000). *Cost Accounting: A.* Upper Saddle River, New Jersey: Prentice Hall.

Jr, H. B., Dyckman, T. R., & Hilton, &. R. (1990). *Cost Accounting.* Boston: PWS-KENT Publishing Company.

Kamaruddin, A. (2007). Akuntansi Manajemen, Dasar – dasar Konsep Biaya dan Pengambilan Keputusan. Jakarta: Raja Grafindo.

Krishantoro, G. A. (2017). *Analisis Pengungkapan Biaya Aktifitas Pertambangan (Eksplorasi, Pengembangan Dan Konstruksi, Produksi, Serta Pengelolaan Lingkungan Hidup) Terhadap Return Of Investment Pada Perusahaan Pertambangan Yang Terdaftar Di Bursa Efek Indonesia.* Yogyakarta: Univeristas Sanata Darma.

Krismiaji dan Anni, A. (2011). Akuntansi Manajemen. Yogyakarta: Unit Penerbit dan Percetakan Sekolah Tinggi Ilmu Manajemen YKPN. .

Lestari, B. A. (2012). Evaluasi Penetapan HPP Roti Pada UKM Saudara Banyumanik. Semarang: Universitas Dian Nuswanto.

Maher, M., & Deakin, E. B. (1994). *Cost accounting.* Burr Ridge, Ill. : Irwin, ©.

Mulyadi. (1993). *Akuntansi Manajemen: Konsep, Manfaat dan Rekayasa.* Yogyakarta: YKPN.

Mulyadi. (2001). Akuntansi Manajemen Konsep, Manfaat dan Rekayasa. *Cetakan ke-3, PT. Salemba Emban Persada*.

Munandar. (1994). Budgeting Perencanaan Kerja Pengkoordinasiaan Kerja. Yogyakarta: Universitas Gadjah Mada.

Murti, S. d. (2007). Pengantar Bisnis Edisi kedua. Yogyakarta: STIE YKPN.

Nawawi, H. (2012). *Metode Penelitian Bidang Sosial.* Yogyakarta: Gajah Mada University.

Perindustrian, K. (2018). *Sektor sektor manufaktur andalan pada tahun 2018.* Retrieved from https://kemenperin.go.id/artikel/18609/Sektor-Sektor-Manufaktur-Andalan-Tahun-2018

Prawironegoro, D. (2008). Penganggaran Perusahaan :Teknik Mengetahui dan Memahami Penyajian Anggaran Perusahaan Sebagai Pedoman Pelaksanaan dan Pengendalian Aktivitas Bisnis. Mitra. Jakarta : Wacana Media.

Refiyana, N. (2015). Analysis Of Calculation Of Cost Of Goods Manufactured By Using Full Costing And Activity Based Costing (ABC) Methods (Case Study On Ud, Dua Putra Jombang Regency) Malang: Universitas Brawijaya.

Salman, R. K. (2013). Akuntansi Biaya: Pendekatan Product Costing Cetakan 1. Jakarta: Akademia Permata.

Sarwono, J. (2006). *Metode Penelitian Kuantitatif dan Kualitatif.* Yogyakarta: Graha Ilmu.

Satnley, M. (2015). Contextualizing Scientific Research Mehodologies. School of Informatics, Engineering and Technology Regent University Collage of Science and Technology, P.O. Box DS 1636, Dansoman, Accra, Ghana.

Secretariat, A. (2012, October 3). *ASEAN FREE TRADE AREA (AFTA): AN UPDATE*. Retrieved from ASEAN: https://asean.org/?static_post=asean-free-trade-area-afta-an-update

Situmorang, A. P. (2019, December 16). *Impor Indonesia pada November 2019 Capai USD 15 Miliar, Terbanyak dari China*. Retrieved from Liputan 6: https://www.liputan6.com/bisnis/read/4135314/impor-indonesia-pada-november-2019-capai-usd-15-miliar-terbanyak-dari-china

Strathmore University. (2009). *Cost Accounting.* Nairobi, Kenya: Strathmore University Press.

Suherman, i. &. (2018, Mei). Determination Analysis For Coal Selling of PT. Berau Coal for Lati's Mine Mouth Power Plant. In *Jurnal Teknologi Mineral Dan Batubara Volume 14, Nomor 2* (pp. 141-157). Bandung: Puslitbang Teknologi Mineral dan Batubara.

Supriyono, R. (1993). Akuntansi Manajemen:Konsep Dasar Akuntansi dan Proses Edisi 1. Yogyakarta: BPFE.

Syamsuddin, L. (2001). Manajemen Keuangan Perusahaan. Jakarta: PT. RajaGrafindo Persada.

Warindrani, A. K. (2006). Akuntansi Manajemen. Jogjakarta: Penerbit Graha Ilmu.

Wessels, S. (1999). The implementation of activity-based costing in South Africa. Pretoria: University of Pretoria.

Wilson, R. (2005). Costing is as simple as ABC.